J. Nijboer[1], H. van Brug[2], M.A. Tryfonidou[3]
J.P.T.M. van Leeuwen[4]

UV-B and vitamin D_3 metabolism in juvenile Komodo dragons (*Varanus komodoensis*)

Abstract

The aim of this research project was to assess the vitamin D status in juvenile Komodo dragons held in captivity in Rotterdam Zoo. In addition, the effect of interference with UV-B on the serum levels of vitamin D metabolites and on the serum calcium concentrations were investigated in three Komodo dragons. Supplying 450 IU vitamin D_3 /kg feed orally did not increase 25-hydroxyvitamin D_3 (25(OH)D_3), the 24-hydroxylated metabolite of vitamin D (24,25$(OH)_2D_3$), 1,25-dihydroxyvitamin D_3 (1,25$(OH)_2D_3$) and calcium levels. In contrast, exposing the Komodo dragons to UV-B altered the levels of vitamin D metabolites. The amount of 25(OH)D_3 increased in komodo dragon 1 (K1) (18 to 195 nmol/ml) and in komodo dragon no 2 (K2) (31 to 291 nmol/ml). The amount of 1,25$(OH)_2D_3$ did not change significantly in both komodo dragons (139.5.6 to 235.3 pmol/l). Measurement of 24,25 $(OH)_2D_3$ in K2 showed a dramatically improvement after exposing to UV-B; the amount of 24,25$(OH)_2D_3$ rose (7.5 to 448.1 ng/ml). Komodo dragon 3 (K3) was send to Gran Canaria where it received natural UV-B. The level of 25(OH)D_3 improved from 18 to 272 nmol/l. The amount of 1,25$(OH)_2D_3$ did not increase either. In all komodo dragons the calcium level remained stable and within the range 3.18 to 4.44 mmol/l. The present study documents for the first time the levels of three vitamin D_3 metabolites and their regulation by UV-B in Komodo dragons. According to literature low levels of 25(OH)D_3 have caused bone defects in juvenile Komodo dragons. The current data show a clear effect of UV-B on the 25(OH)D_3 levels and a concomitant rise in serum 24,25$(OH)_2D_3$ levels while 1,25$(OH)_2D_3$ levels remained constant. Although we have no data on the bone metabolism in our 3 Komodo dragons it is tempting to speculate in view of the published improvements of bone after UV-B treatment, that 24,25$(OH)_2D_3$ is involved in bone metabolism in Komodo dragons. This would be in line with data obtained in chicken and human showing a positive effect on bone. Measurements of a UV-B radiating lamp show that the amount of UV-B declines rapidly over time. The decay rate also differs from lamp to lamp. If "UV-B" lamps are used for synthesising vitamin D_3 through the skin the UV-B radiation should be measured regularly and the lamp should

[1] Veterinary Department, Rotterdam Zoo, Veterinary Department, Van Aersenlaan 49, 3039 KE Rotterdam, The Netherlands, Tel.: +31 10 4431 441, Fax: +31 10 4431 414, Email: J.Nijboer@Rotterdamzoo.nl (Corresponding author).

[2] Optic Research Group, Technical University Delft.

[3] Department of Clinical Sciences of Companion Animal Medicine, Utrecht University.

[4] Department of Internal Medicine, Erasmus MC, Rotterdam.

be replaced before the UV-B radiation is too low for synthesising purposes. This study, although preliminary, clearly shows there is a dramatic change in vitamin D metabolites in juvenile komodo dragons using UV-B light, as compared with offering a dietary vitamin D supplement.

1 Introduction

Komodo dragons (*Varanus komodoensis*) are rare animals, which only inhabit the islands of Komodo, Rintja, and the western half of Flores in Indonesia. Reports of animals on smaller islands nearby, including Padar and Gili Montang are probably based on observations of movement of transient animals by swimming to these islands. Komodo dragons live in the tropics on 8° southern latitude where the intensity of sunlight is much higher than in Western Europe. In nature Komodo dragons bask in the morning, from 15 minutes to more than 3 hours (Auffenberg 1981).

Komodo dragons are opportunistic carnivores, at the top of the food chain on the Indonesian islands. It has been suggested that Komodo dragons can survive on these islands as alpha predators because they are ectothermic, therefore they require less food than mammals. As an adaptation to survival during long periods of low prey density, a Komodo dragon can consume up to 80 % of its own body weight in one meal, feeding on live prey as well as carrion. They are capable of taking down deer, wild boars and water buffalos. When necessary they do not feed for months at a time. Young Komodo dragons feed on insects, small birds and mammals and on other reptiles that may be more readily available throughout the year (Walsh 1999).

Komodo dragons are listed on Cites Appendix 1 by IUCN. The wild population is considered to be several thousands of animals. The major threats include habitat alteration, poaching of prey species and tourism.

The total captive population as of November 1998 was 272 animals which consisted of 65 males, 50 females and 157 of unknown sexes in 49 institutions. Indonesian zoos have 160 animals, North America (82), Europe (14) and Asia (excluding Indonesia) and Australia together have 8 animals. Approximately a dozen successful breedings have been recorded worldwide. Zoos in Europe that maintain Komodo dragons are Thoiry in France, Chester in United Kingdom, Lisbon in Portugal, Reptillad on the Canary Islands in Spain, Zoo Berlin in Germany, Pilzen in the Czech Republic and Rotterdam Zoo in the Netherlands.

In captivity an adult Komodo dragon eats 1.5–3.0 kg of rats a week, depending upon the size of the lizard and the time of the year. Adult animals generally receive no supplemented vitamins and minerals. A diet of whole animals combined with access to hot spots up to 40 °C and natural or artificial UV-B light are thought to be adequate to promote healthy growth and development for adult Komodo dragons.

Hatchlings are fed daily for the first eight months and then every third day throughout the next year. In captivity they live on a diet comprising 20 % of

whole mice and 80 % of chopped beef or lamb to which a vitamin and mineral supplement is added (Walsh 1999).

1.1 Bone problems in (juvenile) Komodo dragons

Allen et al. (1994) reported that nine of the twelve Komodo dragons hatched at the National Zoo in Washington D.C. (USA) had long bone fractures, discovered at about two months of age. Correspondingly the level of 25-hydroxyvitamin D_3 ($25(OH)D_3$), one of the intermediaries metabolites in the Vitamin D_3 synthesis, was low. After exposing the animals to UV-B over two months the $25(OH)D_3$ level increased significantly. It was presumed that rapid growing animals have increased requirements for calcium (Ca), phosphorus (P), and vitamin D_3 and that non-reproductively active adults may be more tolerant to low levels of Ca, P and/or vitamin D_3, or low exposure to UV-B.

In October 1995 Rotterdam Zoo obtained three juvenile Komodo dragons hatched at the National Zoo in Washington D.C. (USA), and known to have received UV-B light to prevent bone problems. Upon arrival in Rotterdam, the young Komodo dragons did not receive UV-B or extra vitamin D initially. Later the decision was made to add vitamin D_3 to their diet, and subsequently they were provided with UV-B emitting lamps. One of the juvenile dragons was moved to Gran Canaria in Spain in June 1999.

1.2 Vitamin D_3 metabolism

Vitamin D represents a group of closely related compounds that possess anti rachitic activity. (Machlin 1990). The major effects of vitamin D are to increase active absorption of the calcium-ion from the proximal intestine and to increase the mineralisation of bones. Rachitis is a deficiency disease of vitamin D, which appears to have been a problem recorded in ancient times; evidence shows that rickets occurred in the Neanderthal man about 50,000 BC. (Machlin 1990). A diagram depicting the synthesis and initial step of metabolism via 24-hydroxylase activity is shown in Figure 1. There are two sources from which vitamin D_3 (cholecalciferol) is normally provided: it is produced in the skin and it is taken up via the diet.

In the skin, 7-dehydrocholesterol is photochemically converted by UV-B to provitamin D_3 that then isomerizes to vitamin D_3. Whether absorbed from the diet via the intestines or produced in the skin, vitamin D_3 is bound to vitamin D-binding protein and moves to the liver, where it is hydroxylated at the carbon 25 position by the enzyme 25-hydroxylase to form 25-hydroxyvitamin D_3 ($25(OH)D_3$). Finally, in the proximal tubules of the kidney the most biologically active vitamin D_3 metabolite, 1,25-dihydroxyvitamin D_3 ($1,25(OH)_2D_3$), is formed. A second metabolite of vitamin D_3 is produced in the kidney, namely $24,25(OH)_2D_3$. Generally, $24,25(OH)_2D_3$ has been considered to be the first step in the degradation pathway of $1,25(OH)_2D_3$ and $25(OH)D_3$. However, several human and animal studies have demonstrated a positive contribution of $24,25(OH)_2D_3$, either alone or in combination with other hormones, to bone metabolism (van Leeuwen et al. 2001). Recent studies in chickens suggest that

$24,25(OH)_2D_3$ together with $1,25(OH)_2D_3$ treatment improves fracture healing, and that $24,25(OH)_2D_3$ serum levels are correlated to fracture healing (Kato et al. 1998, Seo et al. 1997).

The synthesis of $1,25(OH)_2D_3$ is tightly controlled in order to maintain the calcium homeostasis. The major stimulators of $1,25(OH)_2D_3$ formation are low serum calcium, parathyroid hormone and low serum phosphate levels. Increased serum calcium levels (hypercalcemia) inhibits formation of $1,25(OH)_2D_3$. Most interestingly, $1,25(OH)_2D_3$ itself inhibits its own formation but stimulates 24-hydroxylase activity and the formation of $24,25(OH)_2D_3$ and $1,24,25\text{-}(OH)_3D_3$. Thus the metabolic clearance of $1,25(OH)_2D_3$ is enhanced. By these regulatory mechanisms toxic effects of hypercalcemia (too much calcium) in the blood is prevented.

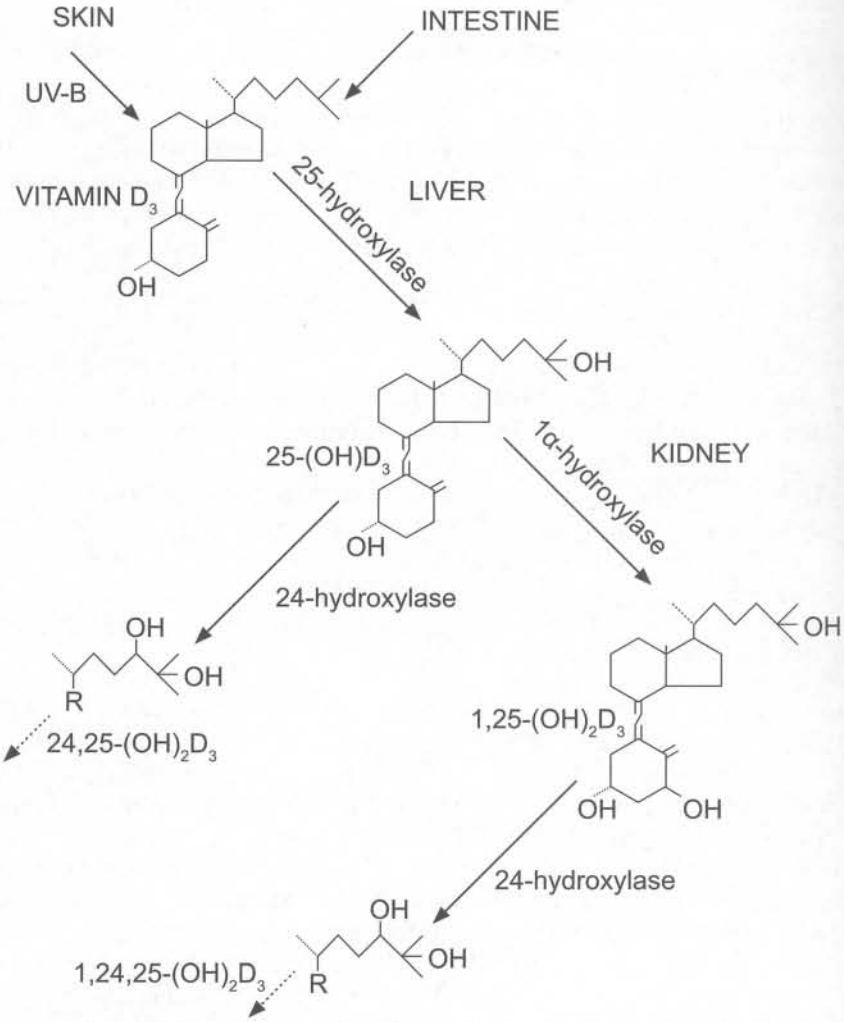

Figure 1. Diagram illustrating vitamin D_3 synthesis. Details are described in the text above.

1.3 UV and UV-B meter

The spectrum of irradiance of wavelengths that reach the earthly atmosphere from the sun is approximately from 100 to 3200 nanometer (nm). Molecules in the atmosphere absorb certain wavelengths, so that the solar spectrum is attenuated when the radiation reaches the surface of earth. Some of the solar radiation is partly absorbed by ozone, oxygen, carbon dioxide and water. It means that life on earth is principally exposed to Ultra Violet (UV), Visible Light and Near Infra Red. The wave length of Near Infra Red is longer than 700 nm. Visible Light has a wavelength from 400 to 700 nm. UV can be divided into: UV-C, with a range from 100–280 nm; UV-B, with a range from 280 to 315 nm; and UV-A, with a length of 315–400 nm. As mentioned before UV-B plays a major role in converting 7-dehydrocholesterol into provitamin D_3 in the skin with a maximum conversion at 297 ± 3 nm (Bernard 1995).

Dependent on the degrees latitude and the time of the year, in some places it is not possible for humans to produce provitamin D_3 by natural light. In locations 52° North latitude (for example Edmonton, in Canada) no provitamin D_3 will be produced from October until the beginning of April (Holick 1997). Berlin, Warschau and Rotterdam in Europe are also situated on the same latitude. Tests in Boston (42° North), have confirmed that no provitamin D_3 was produced from November until February. The European cities of Barcelona and Rome also lie on 42° North. Experiments have demonstrated that provitamin D_3 is produced throughout the year at the latitude of Los Angeles (34° North), the same latitude as locations in Morocco and Northern Syria. The data is relevant to human provitamin D_3 synthesis under these light conditions, but similar considerations can be made about synthesis in reptiles, and Komodo dragons in particular. Normal windows absorb UV-B emissions rather than transmitting them thus if Komodo dragons rely on the availability of UV-B for their provitamin D_3 synthesis, it is unlikely they receive enough UV-B light when kept at European latitudes, particularly during winter months.

The aim of the current study was to assess the vitamin D_3 status in Komodo dragons held in captivity in the Rotterdam Zoo (at 52° North), and to investigate the efficacy of feeding an oral vitamin supplement versus the use of UV-B lamps. A special meter was designed to measure the intensity of UV-B light emissions from the lamps being used (figure 2).

2 Methods

2.1 The Komodo dragons

In Rotterdam Zoo, three Komodo dragons (K1, K2 and K3 respectively) were housed according to the suggestions made by the taxon manager (Walsh 1999). All three were housed separately in a cage with a surface area of 10 square meters. All the Komodo dragons were fed once a week. The diet consisted of whole rats and small rabbits and they were fed ad libitum. After 20 months K1 weighed 2.1 kg , K2 2.5 kg and K3 1.5 kg. According to data from

the National Zoo, the weight for juvenile dragons at 20 months should be between 1.5 kg and 3.1 kg (Allen et al. 1994).

As mentioned already, the Komodo dragons arrived in Rotterdam Zoo in October 1995. For ethical reasons relating to the care and welfare of these animals it was not possible to consistently blood sample all three Komodo dragons simultaneously. Furthermore, on several occasions samples taken were insufficient for analyses. Thus, the data presented in this paper simply documents physiological responses over time to management changes for this species.

In May 1996 (Month 1) the first blood samples were taken from the tail vein using heparin tubes and immediately stored at –68 ºC until analysis. In February 1997 (Month 9) Carmix®, a vitamin and mineral supplement, was added to the diet contributing 450 IU vitamin D_3 per kg food. Blood samples were taken again two months later (Month 11).

Two of the Komodo dragons were exposed to UV-B using Osram Ultra-Vitalux® lightbulbs. The wattage of the lamp is 300 W and it has a service time of 1000 hours. The Osram Ultra-Vitalux® consists of a quartz burner and a tungsten filament which are blended in such a way that, in combination with the special glass bulb and its interior reflector, a certain radiation is emitted. The effect of this radiation is practically the same as the radiation of natural sunlight (Osram Ultra-Vitalux® manual 2001).

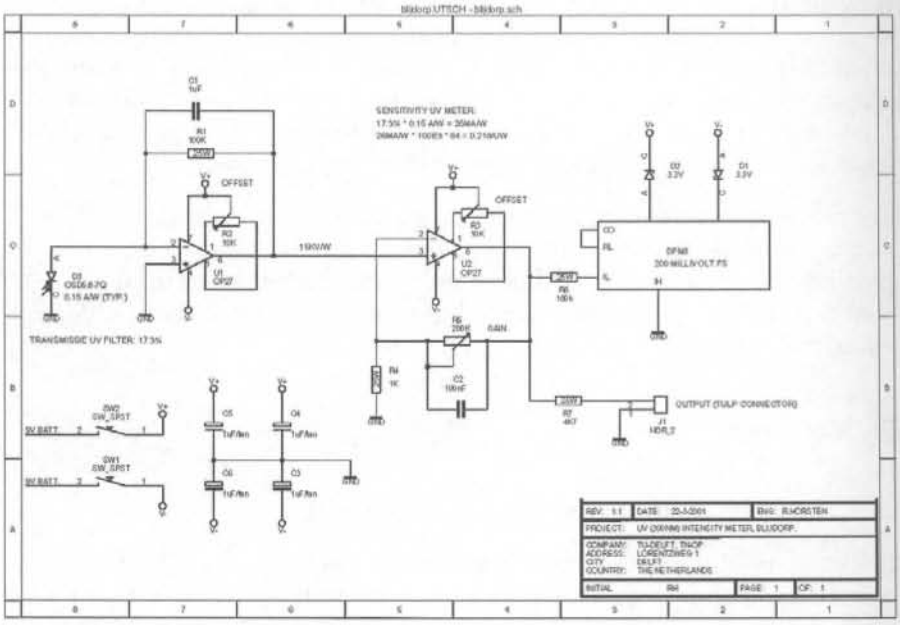

Figure 2. Electric schedule of the UV intensity meter.

K1 was exposed to UV-B from Month 13, K2 from Month 21. All lamps were hung between 60–80 cm above the ground surface in the cages in such a way that the Komodo dragons had free access to the radiation of the lamps.

K3 was sent to Gran Canaria (situated 28° North) in Month 25, where it had access to an outdoor facility and was exposed to natural sunlight. A blood sample of that dragon was obtained in Month 33 and analysed in the same way as samples collected in Rotterdam.

2.2 Vitamin D analyses

The $25(OH)D_3$ analyses were performed according the description of DiaSorin (Minnesota, USA). The assay consists of a two step procedure. The first procedure involves a rapid extraction of $25(OH)D_3$ and other hydroxylated metabolites from the serum. Following extraction, the treated sample is then assayed using an equilibrium radio immunoassay (RIA) procedure which is based on an antibody with specificity to $25(OH)D_3$. The sensitivity of this assay has shown rates to be at or below 1.5 ng/ml.

The amount of $1,25(OH)_2D_3$ was analysed by the IDS Gamma-B kit by immunoextraction followed by quantitation by ^{125}I radio immunoassay. The assay has a calculated sensitivity of 2.1 pg/ml.

Calcium analyses were performed using a colorimetric calcium assay (Sigma Diagnostics). All analyses were performed by the laboratories of the Department of Internal Medicine of the Erasmus MC in Rotterdam, except the analysis of $24,25(OH)_2D_3$ which was performed on the Department of Clinical Sciences of Companion Animal Medicine of the Utrecht University. $24,25(OH)_2D_3$ was quantitatively determined by a modified radio immunoassay (RIA) (DiaSorin, Stillwater, Minnesota, USA). Before processing, labeled standards 24R,25-dihydroxy[26,27-methyl-$_3$H]cholecalciferol (specific activity 15.4 GBq/mg, Amersham Pharmacia Biotech, UK) was added to plasma samples and to the standards of the RIA to determine individual sample recovery. Samples were extracted twice with ethylacetate:cyclohexane (1:1, v/v) and once with methanol:ethylacetate:cyclohexane (4:5:5, v/v) (Bosch 1983) and $24,25(OH)_2D_3$ was separated by solid phase extraction using NH_2 cartridges (Bakerbond spe Amino Disposable Extraction Columns, J.T. Baker, Phillipsburg, USA) according to the described method of McGraw and Hug (1990). The standard curve of the stable vitamin D_3 metabolite showed good parallel dilution to the standard curve of the RIA. The intra- and inter-assay coefficient for $24,25(OH)_2D_3$ were 10.1 % and 8.5 %, respectively.

2.3 Design of the UV-B meter

The intensity or UV-B meter was designed and constructed by the Optic Research Group of the Technical University of Delft in the Netherlands. The UV-B meter is sensitive to a narrow wavelength band around 302.01 nm. The intensity meter consists of a photo diode, placed directly behind an interference filter to ensure that only the desired wavelengths impinge the sensor, and an LCD screen. For situations where it is not possible to read the display,

a mechanism is provided to connect a simple multi-meter to the UV-B meter. This enables the measurement of UV-B radiation to take place at greater distances and otherwise impossible angles.

The photo detector from Centronic (code OSD 5.8-Q) was selected for its relatively high sensitivity for UV-B radiation. The interference filter was obtained from Oriel and was tested by the Optic Research Group on transmission besides the desired wavelength range. No leakage was observed, which means that no wavelength other than the desired ones could penetrate the filter. The peak transmission (17.25 %) of the filter was at 302.01 nm. The photons impinging on the photo detector result in a small voltage. This voltage is shown, after amplification, on the small liquid crystal display.

The UV-B meter is not calibrated absolutely and therefore it can only be used for relative measurements. It can be used to monitor UV-B radiation over time and the spatial distribution measurements of UV-B radiation from a single lamp or a number of lamps. The UV-B meter can be used to check when lamps require to be changed, and to get an impression where the UV-B rich spots are in certain areas. It can be used to detect the light intensity differences between different animal facilities. Suitably educated technical staff can easily manufacture the meter and the costs can be limited to approximately 700 Euro.

The UV-B meter measurements are in milliVolts: the data collected by the photo diode at every point is equal to about 5 nW light falling on the surface of the sensor (1 cm^2). The meter was calibrated in such a way that the value for a distance of 1 meter is 150. The numeric value of the UV-B meter is 0.218 V/microW, therefore in practical terms, the amount of microW/cm^2 is the read out value divided by 218.

In cage no 1 (K2) the UV-B lamp was hung 80 cm above the ground and in cage 2 (K1) for practical reasons, the lamp was 60 cm above the ground. Values presented are the average of two measurements taken during the same day. The UV-B measurements were taken from the ground. Both Komodo dragons had free access to sunbath under the lamps. The lamps were connected to a timer, on for two hours in the morning and two hours in the afternoon, every day. The lamps were changed every six months.

3 Results

3.1 Vitamin D metabolites

Table 1 and figures 3–5 present all the data on levels of $25(OH)D_3$, $1,25(OH)_2D_3$ and $24,25(OH)_2D$ measured in the blood serum of K1, K2 and K3.

From their arrival from Washington D.C. in October 1995 until May 1997, the Komodo dragons did not receive any UV-B or orally supplemented vitamin D_3, aside from what their normal diet (rabbits and rats) would provide. Although they all received sufficient UV-B at the National Zoo (Allen, pers. comm.) to maintain the normal level of $25(OH)D_3$ (150–200 nmol/ml (Gillespie et al. 2000), the amount of $25(OH)D_3$ dropped during the 18 months after arrival

Table 1. Levels of $25(OH)D_3$, $1,25(OH)_2D_3$ and $24,25(OH)_2D_3$ in the blood of the Komodo dragons.

	Komodo dragon (K1)		Komodo dragon (K2)			Komodo dragon (K3)	
Month	$25(OH)D_3$ nmol/l	$1,25(OH)_2D_3$ pmol/l	$25(OH)D_3$ nmol/l	$1,25(OH)_2D_3$ pmol/l	$24,25(OH)_2D_3$ ng/ml	$25(OH)D_3$ nmol/l	$1,25(OH)_2D_3$ pmol/l
1	18	235.3	31	139.5		18	158.2
11	26	159.9	37	201.9	7.5	33	161.3
18	131	132.8	29	188		19	
20						17	121.6
26	195	177.9	201	143.8	294.6		
33						272	152.7
35			291	158.2	448.1		

in Rotterdam. This data can be found as Month 1 in the tables and figures. Vitamin D was then added to the diet (Month 9) and for each dragon, vitamin D_3 was supplemented at the level of 450 IU per kg food. Analyses of the serum in Month 11 showed no significant changes in the level of $25(OH)D_3$.

In Month 13 UV-B emitting lambs (Osram Ultra-Vitalux®) were installed in the cage of K1. The amount of $25(OH)D_3$ increased (Table 1 and Figure 3). K2 was exposed to UV-B in Month 21 which also resulted in an increase of $25(OH)D_3$ (table 1, figure 4). A similar rise in $25(OH)D_3$ was measured from blood analyses taken after K3 was sent to Gran Canaria, in Month 25 (table 1 and figure 5).

The concentration of $1,25(OH)_2D_3$ levels were determined using the same blood samples. However, neither the 450 IU vitamin D supplemented food nor the UV-B treatment resulted in a consistent change in $1,25(OH)_2D_3$ levels (table 1 and the figures 3–5).

Another important vitamin D_3 metabolite is $24,25(OH)_2D_3$. Due to limited amounts of heparin plasma available the $24,25(OH)_2D_3$ levels were only assayed for one dragon (K2). Data were obtained at Months 11, 26 and 35 and concentrations of $24,25(OH)_2D_3$ increased over this time period (table 1 and figure 4). The timing of the increase suggests that it was in response to the UV-B lamps, rather than dietary supplementation.

3.2 Calcium

Throughout the UV-B treatment and the move to Gran Canaria serum calcium levels remained stable for all three dragons. The values are shown in table 2.

Table 2. Calcium levels in the blood of Komodo dragons (mmol/l).

Month	*K1*	*K2*	*K3*
11	4.16	3.84	4.48
18	3.18		
20			3.8
26	3.7	4.44	
33			3.98
35		3.86	

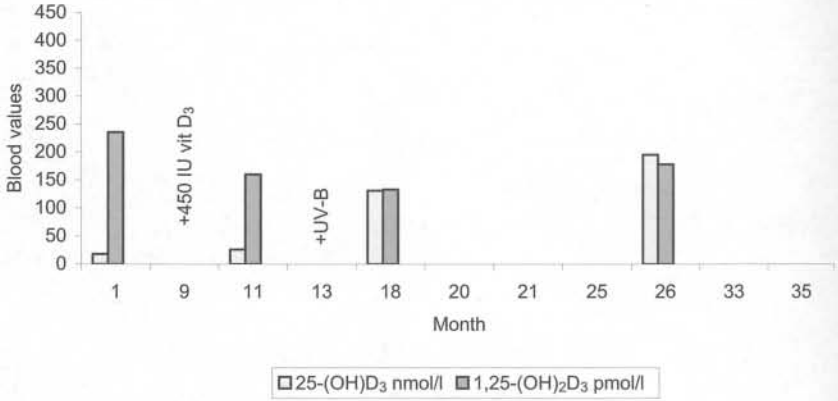

Figure 3: Blood values found in komodo dragon no 1 (K1)

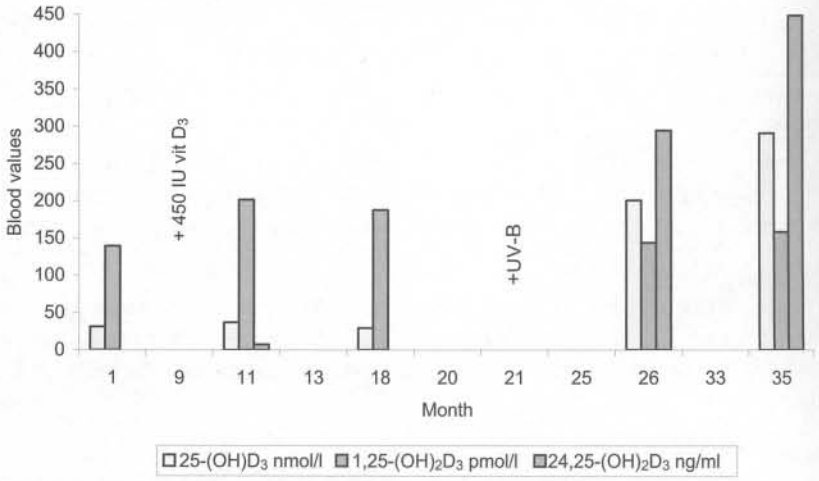

Figure 4. Blood values found in komodo dragon no 2 (K2)

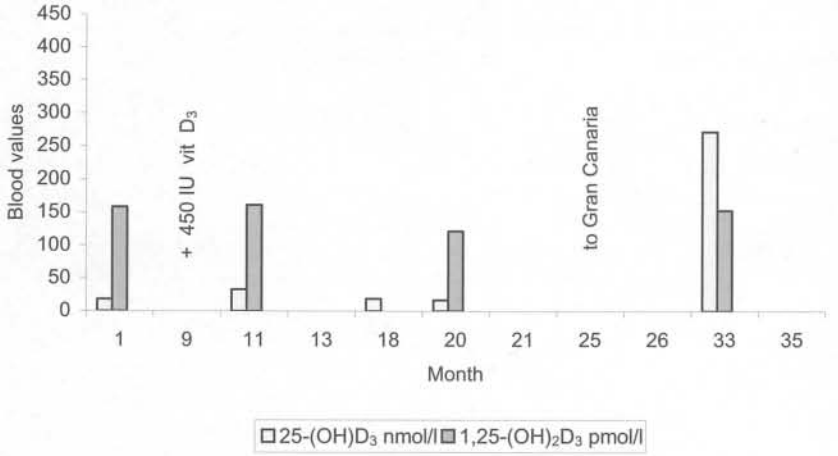

Figure 5. Blood values found in komodo dragon no 3 (K3)

3.3 Lamp radiation

Table 3 shows the decline over time in UV-B emitted from the lamps used in the Komodo dragon facilities. After it was removed from cage No 2, that particular UV-B lamp was used in enclosures for other reptiles and UV-B measured six months later was reduced to 0.16 UVB/cm^2. Similar values were observed after replacing the lamps every six month (van de Koore, pers. comm.).

Table 3. Decline in lamp radiation (watts UV-B/cm^2) of two lamps hanging in two cages.

Month	*Cage 1*	*Cage 2*
19	0.72	
22	0.43	0.8
24	0.34	0.3
25	0.23	0.34

4 Discussion

For practical reasons blood could not be sampled on a systematic basis, therefore the analysed data represents a trend in the changes of the vitamin D metabolites under different circumstances.

The initial values for 25(OH)D_3 measured in Month 1 were very low when compared with levels measured in Komodo dragons exposed to UV-B (150 to 200 nmol/L), and most certainly would have caused bone problems. Similar levels were found in cases of clinical lameness and poor density on radiographs, with fractures in several long bones (Gillespie et al. 2000). Supplementing 450 IU vitamin D_3 per kg food for two month did not improve the 25(OH)D_3 levels, suggesting that juvenile Komodo dragons cannot rely on oral vitamin D_3 to satisfy their vitamin D synthesis. Exposing Komodo dragons to artificial or natural light improves the amount of 25(OH)D_3 within 5 months to within the 'normal' range (150–200 nmol/l).

No reference data were available to evaluate the levels of 1,25$(OH)_2D_3$ observed, ranging from (121.6 to 235.3 pmol/l). The mean value was 163.9 pmol/l (13 blood samples from 3 komodo dragons). No correlation was found with supplying extra vitamin D_3 or exposing the Komodo dragons to UV-B, however the data set is extremely limited.

Although normal values of 24,25$(OH)_2D_3$ are not known it is clear that when Komodo dragons exposed to UV-B the amount of 24,25$(OH)_2D_3$ increases significantly. Due to limited availability of serum, the effect of supplying vitamin D_3 orally on 24,25$(OH)_2D_3$ levels could not be determined in this study.

Calcium levels varied from 3.18 to 4.48 mmol/l, with a mean of 3.93 mmol/l (6 samples from 3 animals). Gillespie et al. (2000) found the mean value for 48 Komodo dragons was 3.62 mmol/l with an observed range for measured

values of 2.94 to 4.30. Therefore the calcium levels measured in Rotterdam fall within the mean range and variation of this larger data set.

The limited data of the current study shows the effect of UV-B on the $25(OH)D_3$ levels in Komodo dragons. Although we have no information on the bone density of the dragons in our study, by combining our observations with those made at the National Zoo on increasing serum $25(OH)D_3$ and the subsequent reduction in bone problems and other clinical symptoms they observed, it is reasonable to suggest that adequate UV-B availability is important for the well being of Komodo dragons. The current study reports for the first time $1,25(OH)_2D_3$ levels in Komodo dragons. An interesting observation is that throughout the treatment period the levels of serum calcium and the most biologically active vitamin D metabolite ($1,25(OH)_2D_3$) remained stable. From a physiological prespective this makes good sense since calcium is a very important ion whose level needs to be controlled very tightly, because both hypocalcaemia and hypocalcaemia can be life threatening. Given that $1,25(OH)_2D_3$ is the most important regulator of serum calcium it is important that the level of this hormone is also strictly regulated. If the dramatic increase in $25(OH)D_3$ levels after UV-B treatment had been followed by a comparable increase in $1,25(OH)_2D_3$ then the animals would have become hypercalcemic.

Combining Gillespie's data and with values presented in this paper it is intriguing to note that despite similar levels of $1,25(OH)_2D_3$ in relation to low and high $25(OH)D_3$ concentrations, clinical problems are observed in Komodo dragons when the concentration of $25(OH)D_3$ is low (Gillespie et al. 2000). Therefore, it is tempting to speculate that an additional vitamin D_3 metabolite might be important to restore the bone defects. A possible candidate is $24,25(OH)_2D_3$ (van Leeuwen et al. 2001), which we show here to increase in parallel to $25(OH)D_3$. This is not unique to Komodo dragons, since in humans an increase in serum calcium or $1,25(OH)_2D_3$ is followed by an increase in 24-hydroxylase activity in order to prevent further formation of $1,25(OH)_2D_3$ and to stimulate inactivation of $1,25(OH)_2D_3$ by forming $1,24,25\text{-}(OH)_3D_3$. A possible role for $24,25(OH)_2D_3$ in this respect is supported by data in humans showing a beneficial effect on bone when $24,25(OH)_2D_3$ was added to the treatment with 1α-(OH)-vitamin D_3 (i. e. a precursor of $1,25(OH)_2D_3$, see figure 1) (Birkenhäger-Frenkel et al. 1995). Moreover, a positive effect of $24,25(OH)_2D_3$ on fracture healing has been reported (Seo et al. 1997; Kato et al. 1998).

The amount of UV-B emitted from a so-called UV-B lamp declines rapidly. Furthermore not every Osram Ultra-Vitalux® has the same amount of UV-B radiation and the decay rate of radiation also differs for each lamp. The UV-B radiation is highest in the middle of the lamp. When the sensor of the UV-B meter is moved from the centre of the lamp, the radiation declines very fast. Also, the radiation declines rapidly if the lamp is placed higher above the ground (Nijboer 2000, unpublished data). No UV-B radiation values were measured from other UV-B lamps but it is likely that similar observations would be made. Thus, when UV-B lamps are provided for vitamin D_3 synthesis via the skin, the amount of UV-B radiation should be measured not just when the lamps are installed, but also during the burning life of the lamp so they

are replaced once UV-B emittance declines (which may not be the same as the manufacturer's recommendation).

More research is needed to estimate the minimal UV-B radiation for Komodo dragons to ensure vitamin D_3 metabolic synthesis remains within the normal range.

5 Conclusions

1. Supplying vitamin D_3 orally to juvenile Komodo dragons did not improve serum levels of $25(OH)D_3$ and $1,25(OH)_2D_3$.
2. Exposing juvenile Komodo dragons to UV-B radiation increased the $25(OH)D_3$ and $24,25(OH)_2D_3$ levels but not the amount of $1.25\text{-}(OH)_2D_3$.
3. Exposing juvenile Komodo dragons to UV-B did not change the amount of calcium in the blood.
4. Measuring UV-B radiation of lamps is necessary to obtain a reliable indication of the used UV-B lamps.
5. Adequate UV-B radiation is important for vitamin D synthesis and the well being of Komodo dragons.

Acknowledgment

C. J. Buurma, Department of Internal Medicine, Erasmus Medical Centre, Rotterdam for technical laboratory support.

Products mentioned in the text

Carmix®: vitamin mineral supplement, manufactured by Hope Farms, Hoge Rijndijk 14, 3440 AB Woerden, The Netherlands.

Osram Ultra-Vitalux® : Solar lamp, Osram, Germany.

References

Allen, M. E.; Oftedal, O.; Roiscoe, R.; Walsh, T.; Holick, M. (1994): Update on vitamin D and UV light in basking lizards. *Proceedings American Association of Zoo Veterinarians*, pp. 214–215.

Auffenberg, W. (1981): *The behavioural ecology of the Komodo dragons*. Library of Congress Cataloging in Publication Data. USA.

Bernard, J. B. (1995): *Spectral irradiance of fluorescent lamps and their efficacy for promoting vitamin D synthesis in herbivorous reptiles*. Dissertation Michigan State University. UMI, Ann Arbor. USA.

Birkenhäger-Frenkel, D. H.; Pols, H. A. P.; Zeelenberg, J.; Eijgelsheim, J. J.; Schot, R.; Nigg, A. L.; Weimar, W.; Mulder, P. G.; Birkenhäger, J. C. (1995): Effects of 24R,25-dihydroxyvitamin D_3 in combination with the 1α-

hydroxyvitamin D3 in predialysis renal insufficiency: biochemistry and histomorphometry of cancellous bone. *J. Bone Miner. Res.* 10: 197–204.

Bosch, R.;Visser, W. J.; Thijssen, J. H.; Duursma, S. A. (1983): Synthesis of [10S(19)-3H] dihydrotachysterol from ergocalciferol and preliminary investigations into its metabolic fate in rats. *J. Steroid Biochem.* 18: 441–447.

Gillespie, D.; Frye, F. L.; Stockham, S. L.; Fredeking, T. (2000): Blood values in Wild and Captive Komodo Dragons (*Varanus Komodoesnis*). *Zoo Biology* 19: 495–509.

Holick, M. F. (1997): Photobiology of Vitamin D. In: *Vitamin D* (Feldman, Glorieux and Pike, eds.). Academic Press.

Kato, A.; Seo, E. G.; Einhorn, T. A.; Morita, K.; Bishop, J. E.; Norman, A. W. (1998): Studies on 24R,25-dihyroxivitamin D_3: evidence for a non nuclear membrane receptor in the chick tibial fracture-healing of tibial fracture-healing callus. *Bone* 23: 141–146.

Van Leeuwen, J. P. T. M.; van den Bemd, G. J. C. M.; van Driel, M.; Buurman, C. J.; Pols, H. A. P. 2001: 24,25-Dihydroxyvitamin D_3 and bone metabolism. *Steroids* 66: 375–380.

Machlin, L. J. (1990): *Handbook of vitamins*. 2nd Edition, Marcel Dekker, Inc. New York. USA.

McGraw, C. A.; Hug, G. (1990): Simultaneous measurement of 25-hydroxy, 24,25-dihydroxy-, and 1,25-dihydroxyvitamin D without use of HPLC. *Med. Lab Sci.* 47: 17–25.

Seo, E. G.; Einhorn, A. W.; Norman, A. W. (1997): 24R,25-dihydroxyvitamin D_3: an essential vitamin D_3 metalbolite for both normal bone integrity and healing of tibial fracture in chicks. *Endocrinology* 138 (9): 3864–3872.

Walsh, T.; Visser, G. (1999): *Taxon Management Account Komodo Dragon*. National Zoological Park, Washington D.C., U.S.A.